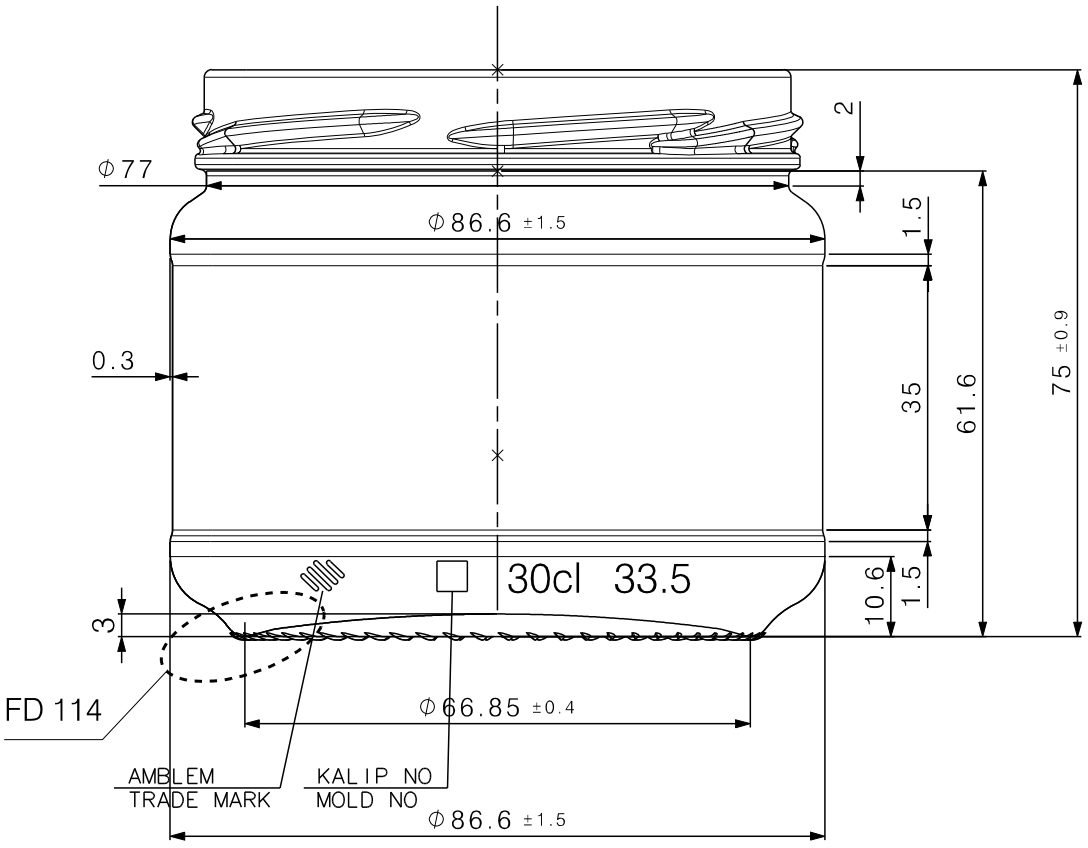
Φ77
Φ86.6 ±1.5
2
1.5
0.3
35
61.6
75 ±0.9
30cl 33.5
10.6
1.5
3
FD 114
Φ66.85 ±0.4
AMBLEM
TRADE MARK
KALIP NO
MOLD NO
Φ86.6 ±1.5

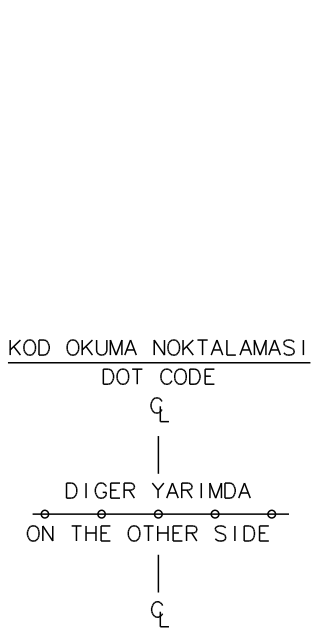
KOD OKUMA NOKTALAMASI
DOT CODE
DIGER YARIMDA
ON THE OTHER SIDE

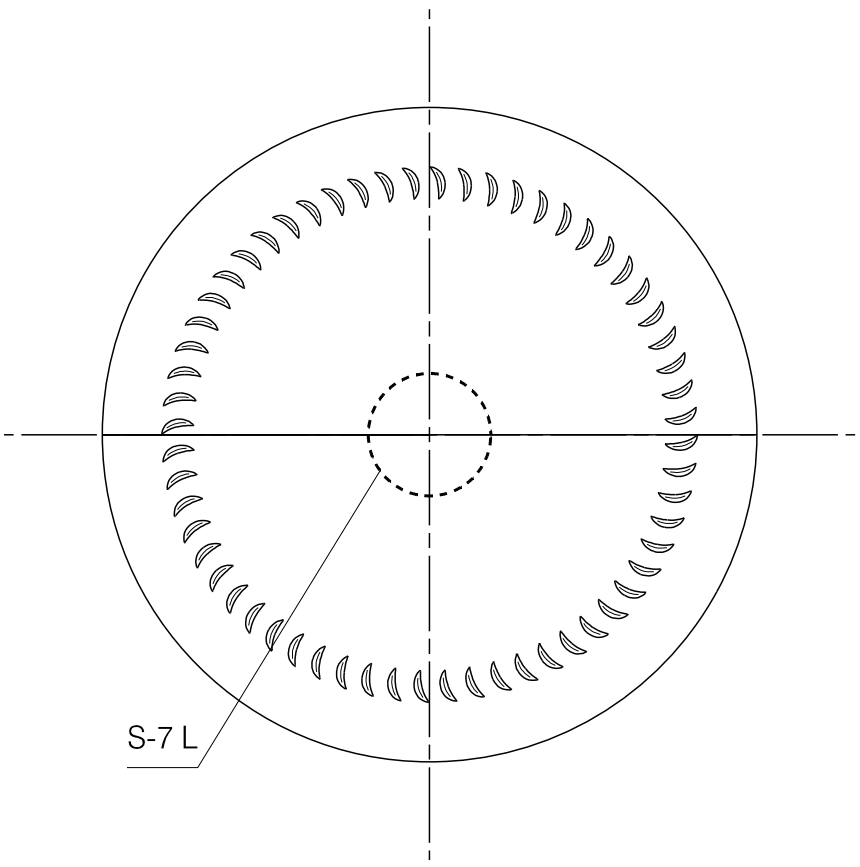
S-7 L