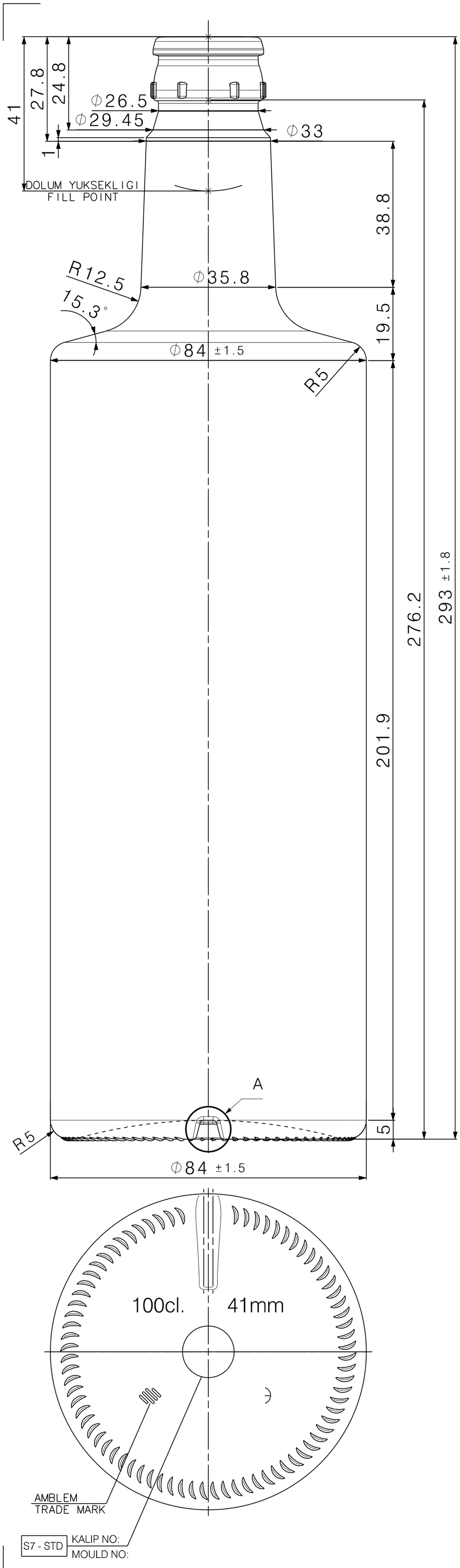

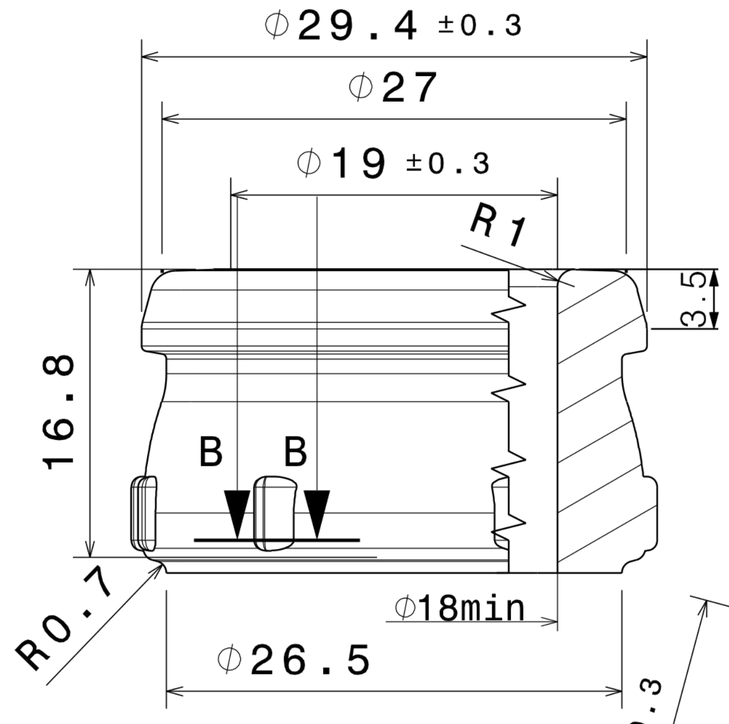

Kafa Detayi/Finish
Detail
Olcek/Scale: 2:1

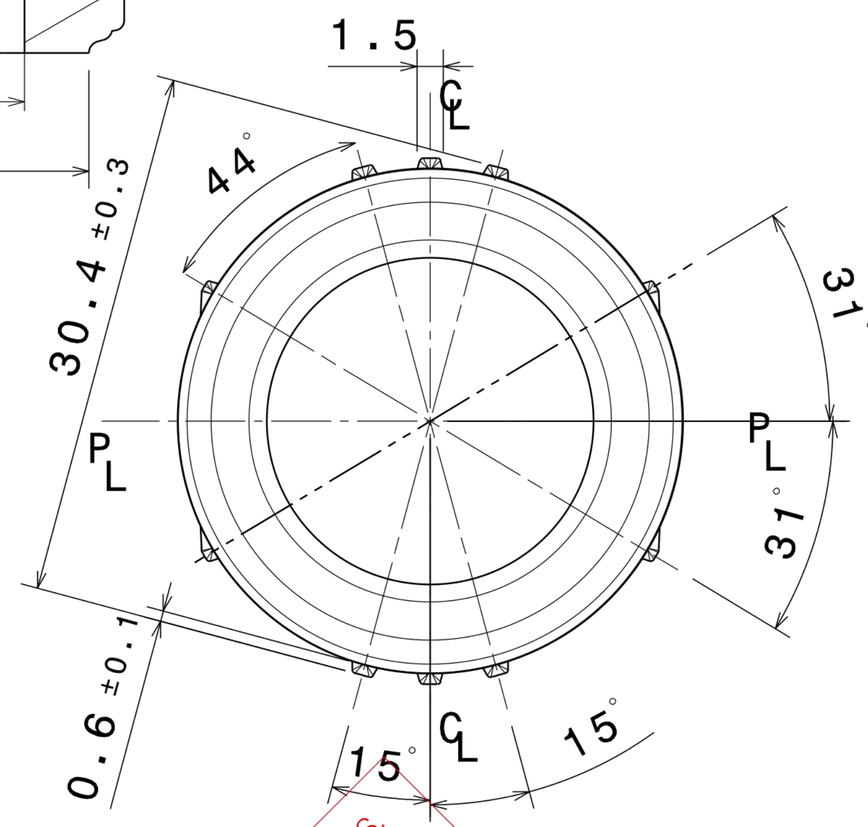

Ust Gorunus/Top View
Olcek/Scale: 2:1

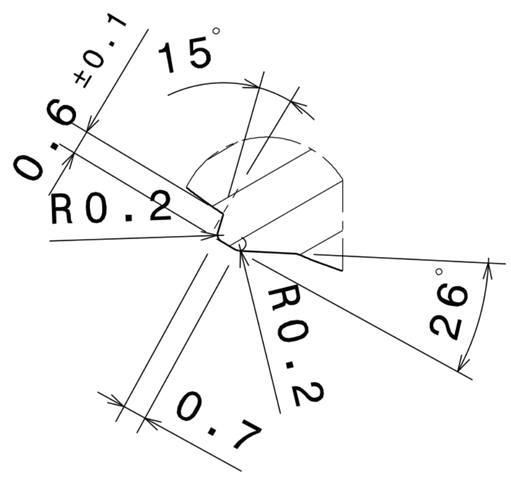

B-B Kesidi/Section
view B-B
Olcek/Scale: 4:1

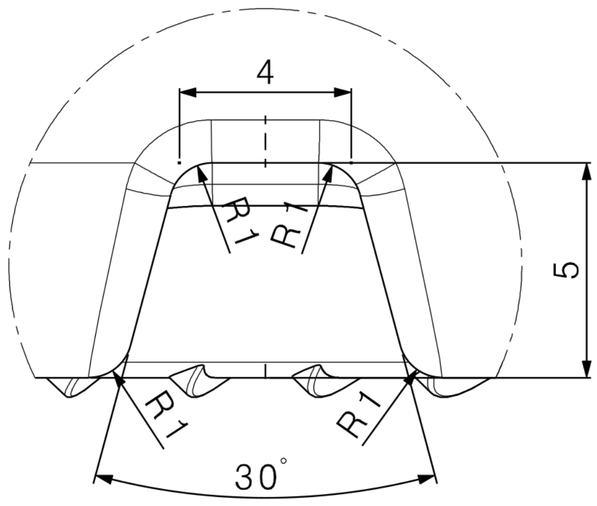

A Detayi/Detail A
Scale: 5:1

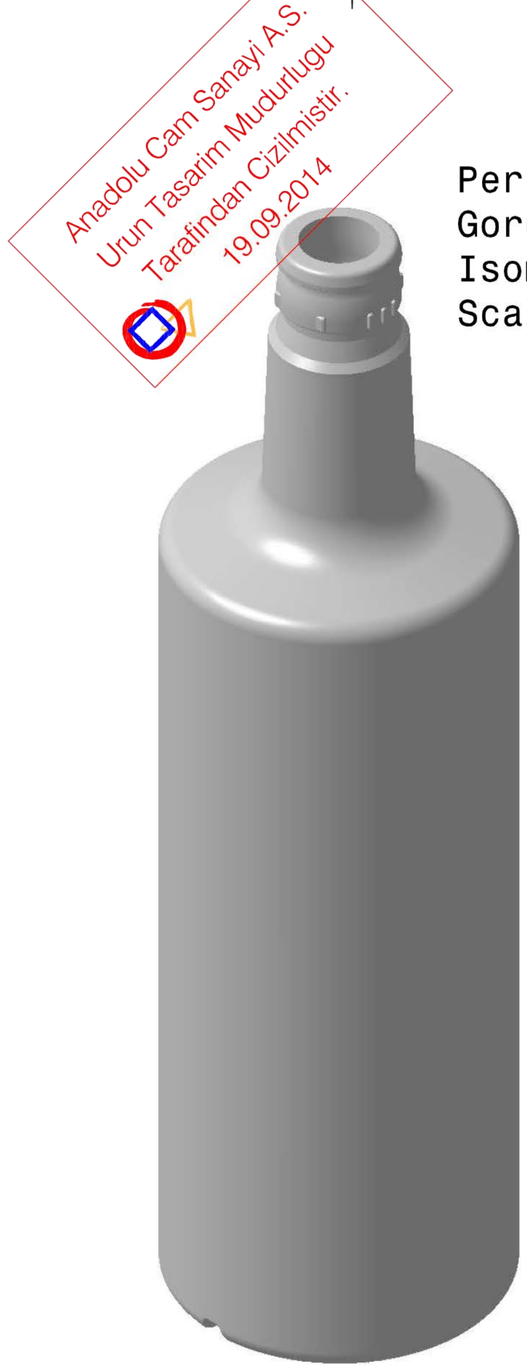

Perspektif
Gorunus/
Isometric view
Scale: 1:2

Anadolu Cam Sanayi A.S.
Urun Tasarim Mudurlugu
Tarafindan Cizilmistir.
19.09.2014